andis®

MODEL D-3 CORDLESS TRIMMER 230/240 VOLT

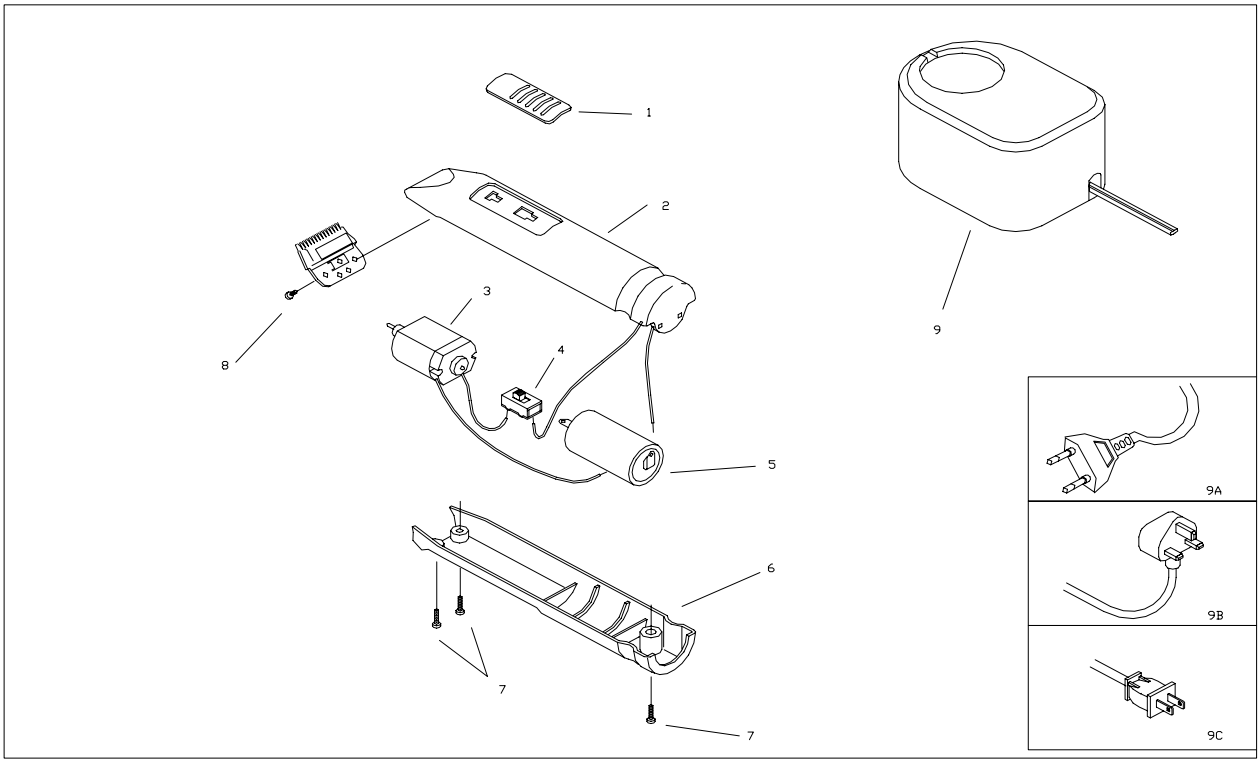

ITEM NO.	PART NO.	DESCRIPTION	QTY. REQ'D
1	32564	Switch Button	1
2		Upper Housing Assembly	
2a	32588	Upper Housing Assembly (Edjer II)	1
2b	32587	Upper Housing Assembly (T-Edjer II)	1
3	32098	Motor Assembly	1
4	29950	Switch	
5	69018	Battery	1
6	32093	Lower Housing	1
7	32580	Housing Screw	3
8	29271	Blade Screw	2
9		Charger Assembly	
9a	32725	Charger 230V (CE)	1
9b	32770	Charger 240V (BS)	1
9c	32780	Charger 240V (SAA)	1

ITEM NO.	PART NO.	DESCRIPTION

IMPORTANT INFORMATION

When ordering repair parts, include part number, part name and model of trimmer. For best performance, trimmer blades should be CLEANED and OILED with Clipper Oil before and after use, If repair is necessary, return to any Andis Authorized Repair Service Station, or to Andis Company, 1800 Renaissance Blvd., Wisconsin, 53177 U.S.A.. Pack carefully, mail either Insured Parcel Post, or U.P.S. , attach a letter to outside of package explaining difficulty.

Download from Www.Somanuals.com. All Manuals Search And Download.

Free Manuals Download Website

http://myh66.com

http://usermanuals.us

http://www.somanuals.com

http://www.4manuals.cc

http://www.manual-lib.com

http://www.404manual.com

http://www.luxmanual.com

http://aubethermostatmanual.com

Golf course search by state

http://golfingnear.com

Email search by domain

http://emailbydomain.com

Auto manuals search

http://auto.somanuals.com

TV manuals search

http://tv.somanuals.com